Printable protractor

testpagelab.com

Marked every degree, numbered every 10 degrees both ways. Cut along the grey lines.

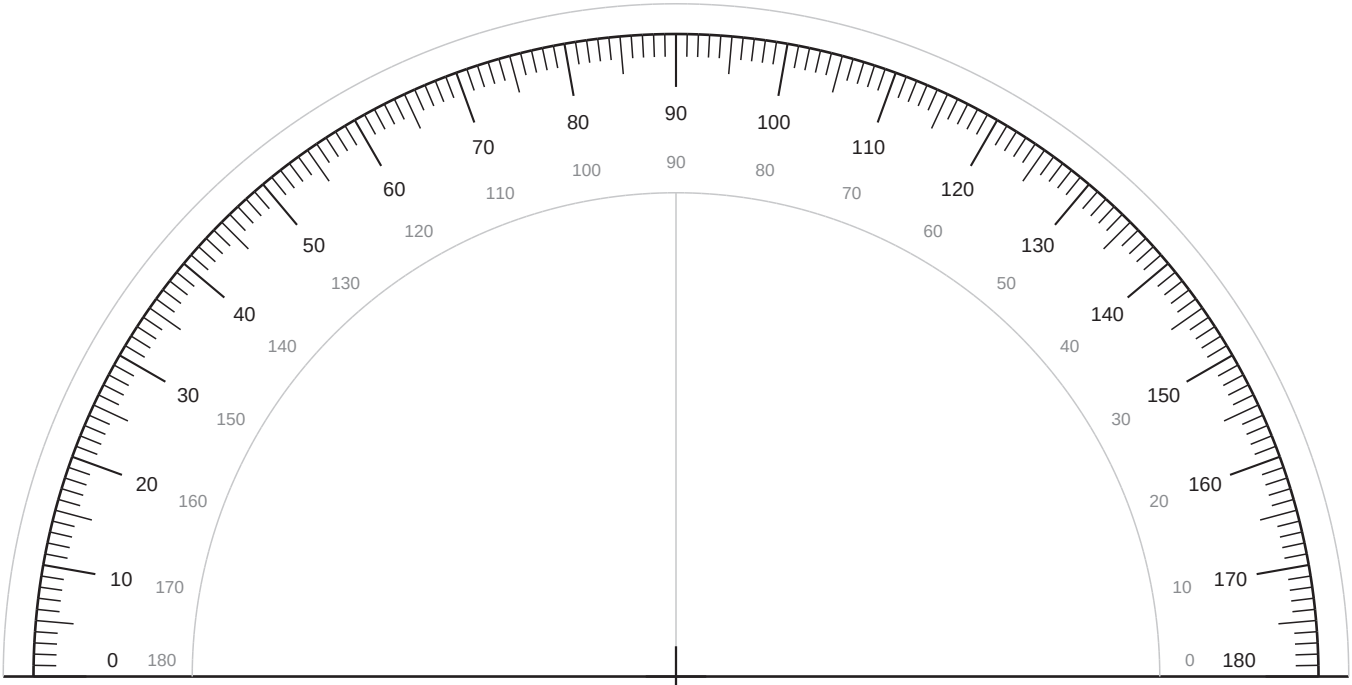

Put this point on the angle's corner

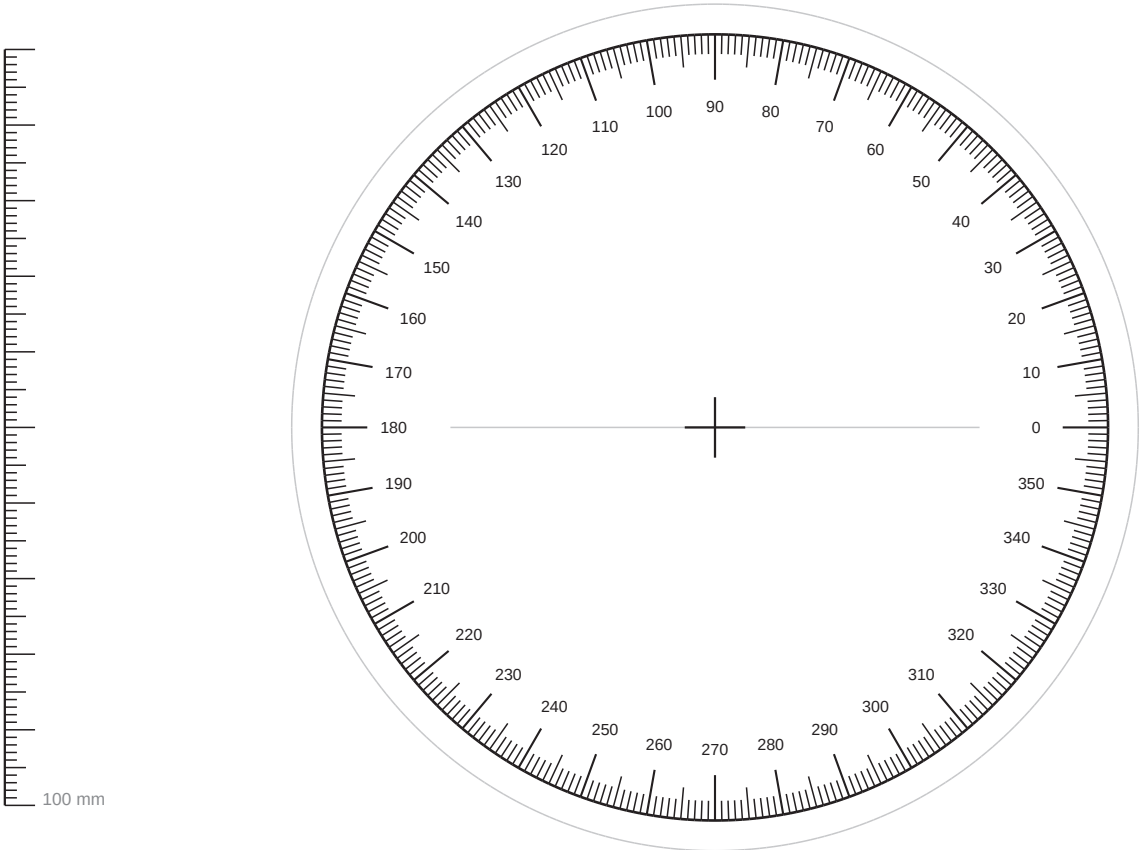

100 mm



This bar and the upright one are each exactly 100 mm